Cambridge Assessment International Education

Cambridge International AS & A Level

CANDIDATE NAME

CENTRE NUMBER

CANDIDATE NUMBER

3421844789

PHYSICS **9702/22**

Paper 2 AS Level Structured Questions **October/November 2020**

1 hour 15 minutes

You must answer on the question paper.

No additional materials are needed.

INSTRUCTIONS

- Answer **all** questions.
- Use a black or dark blue pen. You may use an HB pencil for any diagrams or graphs.
- Write your name, centre number and candidate number in the boxes at the top of the page.
- Write your answer to each question in the space provided.
- Do **not** use an erasable pen or correction fluid.
- Do **not** write on any bar codes.
- You may use a calculator.
- You should show all your working and use appropriate units.

INFORMATION

- The total mark for this paper is 60.
- The number of marks for each question or part question is shown in brackets [ ].

This document has **20** pages. Blank pages are indicated.

© UCLES 2020

Data

speed of light in free space	$c = 3.00 \times 10^{8}\,\text{m s}^{-1}$
permeability of free space	$\mu_0 = 4\pi \times 10^{-7}\,\text{H m}^{-1}$
permittivity of free space	$\varepsilon_0 = 8.85 \times 10^{-12}\,\text{F m}^{-1}$
	$\left(\frac{1}{4\pi\varepsilon_0} = 8.99 \times 10^{9}\,\text{m F}^{-1}\right)$
elementary charge	$e = 1.60 \times 10^{-19}\,\text{C}$
the Planck constant	$h = 6.63 \times 10^{-34}\,\text{J s}$
unified atomic mass unit	$1\,\text{u} = 1.66 \times 10^{-27}\,\text{kg}$
rest mass of electron	$m_e = 9.11 \times 10^{-31}\,\text{kg}$
rest mass of proton	$m_p = 1.67 \times 10^{-27}\,\text{kg}$
molar gas constant	$R = 8.31\,\text{J K}^{-1}\,\text{mol}^{-1}$
the Avogadro constant	$N_A = 6.02 \times 10^{23}\,\text{mol}^{-1}$
the Boltzmann constant	$k = 1.38 \times 10^{-23}\,\text{J K}^{-1}$
gravitational constant	$G = 6.67 \times 10^{-11}\,\text{N m}^2\,\text{kg}^{-2}$
acceleration of free fall	$g = 9.81\,\text{m s}^{-2}$

© UCLES 2020

Formulae

uniformly accelerated motion	$s = ut + \frac{1}{2}at^2$ $v^2 = u^2 + 2as$
work done on/by a gas	$W = p\Delta V$
gravitational potential	$\phi = -\frac{Gm}{r}$
hydrostatic pressure	$p = \rho gh$
pressure of an ideal gas	$p = \frac{1}{3}\frac{Nm}{V}\langle c^2 \rangle$
simple harmonic motion	$a = -\omega^2 x$
velocity of particle in s.h.m.	$v = v_0 \cos \omega t$ $v = \pm \omega \sqrt{(x_0^2 - x^2)}$
Doppler effect	$f_o = \frac{f_s v}{v \pm v_s}$
electric potential	$V = \frac{Q}{4\pi\varepsilon_0 r}$
capacitors in series	$1/C = 1/C_1 + 1/C_2 + \ldots$
capacitors in parallel	$C = C_1 + C_2 + \ldots$
energy of charged capacitor	$W = \frac{1}{2}QV$
electric current	$I = Anvq$
resistors in series	$R = R_1 + R_2 + \ldots$
resistors in parallel	$1/R = 1/R_1 + 1/R_2 + \ldots$
Hall voltage	$V_H = \frac{BI}{ntq}$
alternating current/voltage	$x = x_0 \sin \omega t$
radioactive decay	$x = x_0 \exp(-\lambda t)$
decay constant	$\lambda = \frac{0.693}{t_{\frac{1}{2}}}$

© UCLES 2020

[Turn over

Answer **all** the questions in the spaces provided.

1 **(a)** Complete Table 1.1 by putting a tick (✓) in the appropriate column to indicate whether the listed quantities are scalars or vectors.

Table 1.1

quantity	scalar	vector
acceleration		
density		
temperature		
momentum		

[2]

(b) A toy train moves along a straight section of track. Fig. 1.1 shows the variation with time t of the distance d moved by the train.

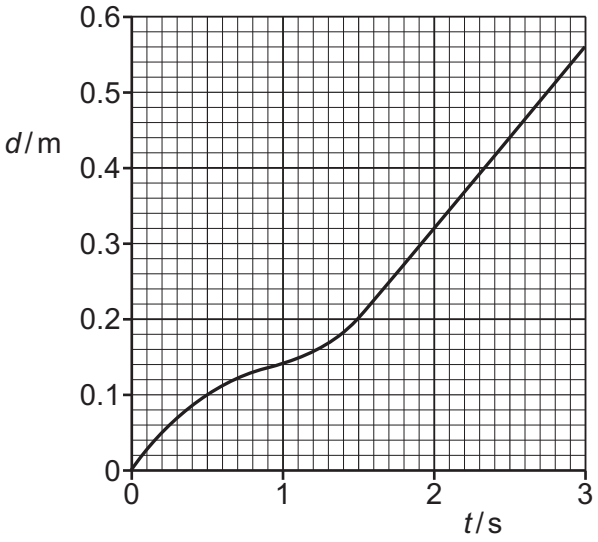

Fig. 1.1

(i) Describe qualitatively the motion of the train between time $t = 0$ and time $t = 1.0$ s.

.....

..... [1]

© UCLES 2020

(ii) Determine the speed of the train at time $t = 2.0\,s$.

speed = ... $m\,s^{-1}$ [2]

(c) The straight section of track in **(b)** is part of the loop of track shown in Fig. 1.2.



Fig. 1.2

The train completes exactly one lap of the loop.

State and explain the average velocity of the train over the one complete lap.

.....

.....

..... [1]

[Total: 6]

2 **(a)** A cylinder is suspended from the end of a string. The cylinder is stationary in water with the axis of the cylinder vertical, as shown in Fig. 2.1.

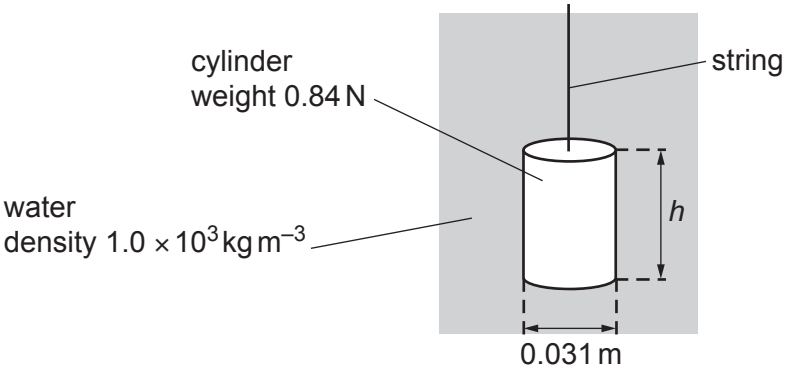

Fig. 2.1 (not to scale)

The cylinder has weight 0.84 N, height h and a circular cross-section of diameter 0.031 m. The density of the water is 1.0×10^3 kg m^{-3}. The difference between the pressures on the top and bottom faces of the cylinder is 520 Pa.

(i) Calculate the height h of the cylinder.

h = ... m [2]

(ii) Show that the upthrust acting on the cylinder is 0.39 N.

[2]

(iii) Calculate the tension T in the string.

T = ... N [1]

© UCLES 2020

(b) The string is now used to move the cylinder in **(a)** vertically upwards through the water. The variation with time t of the velocity v of the cylinder is shown in Fig. 2.2.

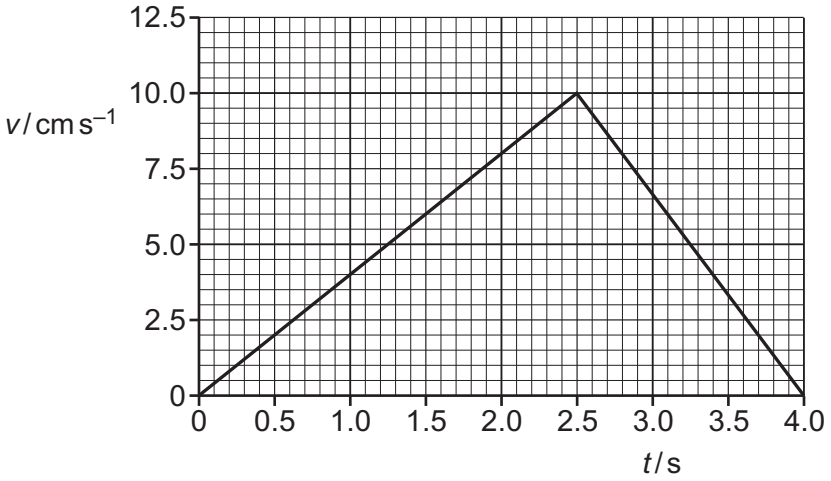

Fig. 2.2

(i) Use Fig. 2.2 to determine the acceleration of the cylinder at time $t = 2.0\,s$.

acceleration = ... $m\,s^{-2}$ [2]

(ii) The top face of the cylinder is at a depth of 0.32 m below the surface of the water at time $t = 0$.

Use Fig. 2.2 to determine the depth of the top face below the surface of the water at time $t = 4.0\,s$.

depth = ... m [2]

(c) The cylinder in **(b)** is released from the string at time $t = 4.0\,s$. The cylinder falls, from rest, vertically downwards through the water. Assume that the upthrust acting on the cylinder remains constant as it falls.

(i) State the name of the force that acts on the cylinder when it is moving and does not act on the cylinder when it is stationary.

..... [1]

(ii) State and explain the variation, if any, of the acceleration of the cylinder as it falls downwards through the water.

.....

.....

..... [2]

[Total: 12]

BLANK PAGE

3 **(a)** A spring is fixed at one end and is compressed by applying a force to the other end. The variation of the force F acting on the spring with its compression x is shown in Fig. 3.1.

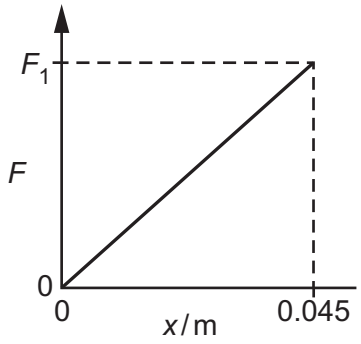

Fig. 3.1

A compression of 0.045 m is produced when a force F_1 acts on the spring. The spring has a spring constant of 800 N m^{-1}.

(i) Determine F_1.

F_1 = ... N [2]

(ii) Use Fig. 3.1 to show that, for a compression of 0.045 m, the elastic potential energy of the spring is 0.81 J.

[2]

(b) A child's toy uses the spring in **(a)** to launch a ball of mass 0.020 kg vertically into the air. The ball is initially held against one end of the spring which has a compression of 0.045 m. The spring is then released to launch the ball. The kinetic energy of the ball as it leaves the toy is 0.72 J.

(i) The toy converts the elastic potential energy of the spring into the kinetic energy of the ball. Use the information in **(a)(ii)** to calculate the percentage efficiency of this conversion.

efficiency = ... % [1]

© UCLES 2020

(ii) Determine the initial momentum of the ball as it leaves the toy.

momentum = ... N s [3]

(c) The ball in **(b)** leaves the toy at point A and moves vertically upwards through the air. Point B is the position of the ball when it is at maximum height *h* above point A, as illustrated in Fig. 3.2.

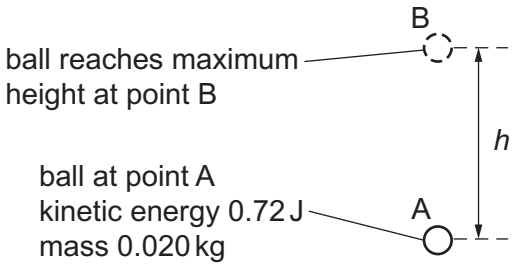

Fig. 3.2 (not to scale)

The gravitational potential energy of the ball increases by 0.60 J as it moves from A to B.

(i) Calculate *h*.

h = ... m [2]

(ii) Determine the average force due to air resistance acting on the ball for its movement from A to B.

average force = ... N [2]

(iii) When there is air resistance, the ball takes time *T* to move from A to B.

State and explain whether the time taken for the ball to move from A to its maximum height will be more than, less than or equal to time *T* if there is **no** air resistance.

.....

..... [1]

[Total: 13]

4 A rigid plank is used to make a ramp between two different horizontal levels of ground, as shown in Fig. 4.1.

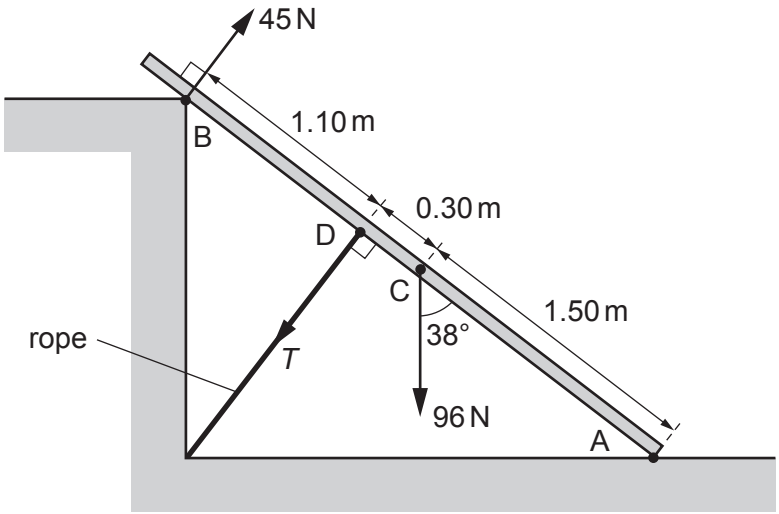

Fig. 4.1 (not to scale)

Point A at one end of the plank rests on the lower level of the ground. A force acts on, and is perpendicular to, the plank at point B. The plank is held in equilibrium by a rope that connects point D on the plank to the ground. The plank has a weight that may be considered to act from its centre of gravity C.

The rope is perpendicular to the plank and has tension *T*. The plank is at an angle of 38° to the vertical.

The forces and the distances along the plank of points A, B, C and D are shown in Fig. 4.1.

(a) Show that the component of the weight that is perpendicular to the plank is 59 N.

[1]

(b) By taking moments about end A of the plank, calculate the tension *T*.

T = ... N [3]

[Total: 4]

5 Microwaves with the same wavelength and amplitude are emitted in phase from two sources X and Y, as shown in Fig. 5.1.

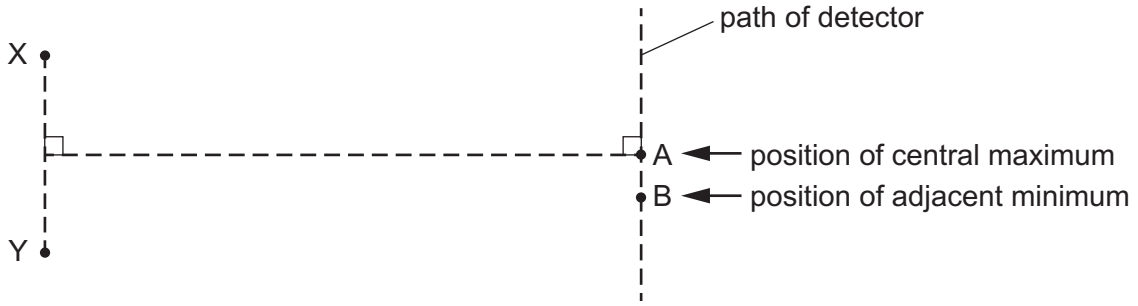

Fig. 5.1 (not to scale)

A microwave detector is moved along a path parallel to the line joining X and Y. An interference pattern is detected. A central intensity maximum is located at point A and there is an adjacent intensity minimum at point B. The microwaves have a wavelength of 0.040 m.

(a) Calculate the frequency, in GHz, of the microwaves.

frequency = ... GHz [3]

(b) For the waves arriving at point B, determine:

(i) the path difference

path difference = ... m [1]

(ii) the phase difference.

phase difference = ...° [1]

© UCLES 2020

(c) The amplitudes of the waves from the sources are changed. This causes a change in the amplitude of the waves arriving at point A. At this point, the amplitude of the wave arriving from source X is doubled and the amplitude of the wave arriving from source Y is also doubled.

Describe the effect, if any, on the intensity of the central maximum at point A.

.....

.....

..... [2]

(d) Describe the effect, if any, on the positions of the central intensity maximum and the adjacent intensity minimum due to the following separate changes.

(i) The separation of the sources X and Y is increased.

.....

..... [1]

(ii) The phase difference between the microwaves emitted by the sources X and Y changes to 180°.

.....

..... [1]

[Total: 9]

6 **(a)** A network of three resistors of resistances R_1, R_2 and R_3 is shown in Fig. 6.1.

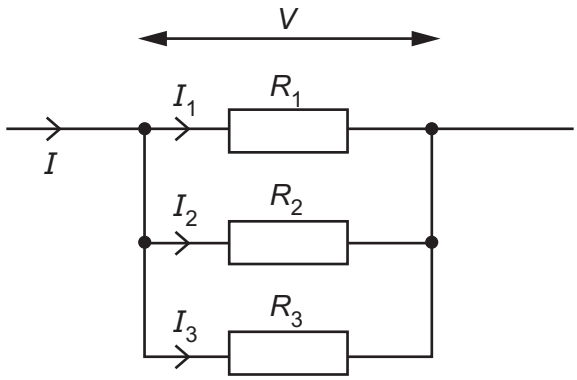

Fig. 6.1

The individual currents in the resistors are I_1, I_2 and I_3. The total current in the combination of resistors is I and the potential difference across the combination is V.

Show that the combined resistance R of the network is given by

$$\frac{1}{R} = \frac{1}{R_1} + \frac{1}{R_2} + \frac{1}{R_3}.$$

[2]

(b) A battery of electromotive force (e.m.f.) 8.0 V and internal resistance r is connected to three resistors X, Y and Z, as shown in Fig. 6.2.

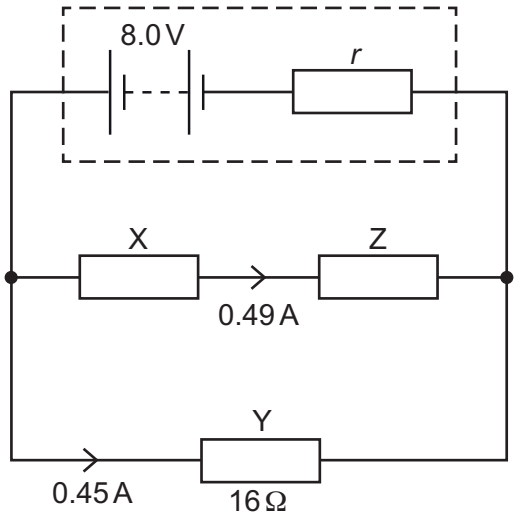

Fig. 6.2

© UCLES 2020

Resistor Y has a resistance of 16 Ω. The current in resistor X is 0.49A and the current in resistor Y is 0.45A.

Calculate:

(i) the current in the battery

current = ... A [1]

(ii) the internal resistance *r* of the battery.

r = ... Ω [2]

(c) Resistors X and Y in Fig. 6.2 are made from wires of the same material and cross-sectional area. The average drift speed of the free electrons in X is $2.1 \times 10^{-4}\,m\,s^{-1}$.

Calculate the average drift speed *v* of the free electrons in Y.

v = ... $m\,s^{-1}$ [2]

(d) Resistor Z in Fig. 6.2 is replaced by a new resistor of smaller resistance.

State and explain the effect, if any, on the terminal potential difference of the battery.

.....

.....

..... [2]

[Total: 9]

7 **(a)** State a similarity and a difference between an up quark and an up antiquark.

similarity: .....

difference: .....
[2]

(b) Fig. 7.1 shows an electron in an electric field, in a vacuum, at an instant when the electron is stationary.

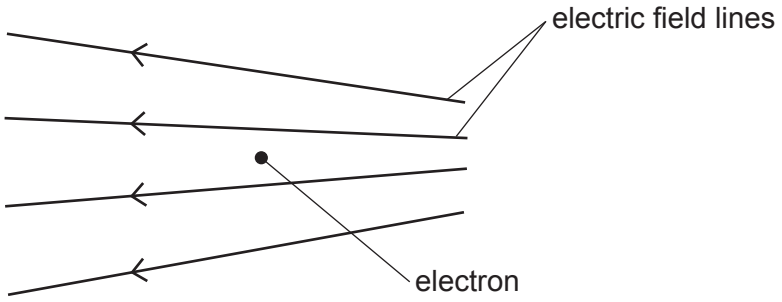

Fig. 7.1

(i) On Fig. 7.1, draw an arrow to show the direction of the electric force acting on the stationary electron. [1]

(ii) The electric field causes the electron to move from its initial position.

Describe and explain the acceleration of the electron due to the field, as the electron moves through the field.

.....

.....

.....

..... [2]

(iii) A stationary α-particle is now placed in the same electric field at the same initial position that was occupied by the electron.

Compare the initial electric force acting on the α-particle with the initial electric force that acted on the electron.

.....

.....

.....

..... [2]

[Total: 7]

© UCLES 2020

BLANK PAGE

© UCLES 2020

BLANK PAGE

Permission to reproduce items where third-party owned material protected by copyright is included has been sought and cleared where possible. Every reasonable effort has been made by the publisher (UCLES) to trace copyright holders, but if any items requiring clearance have unwittingly been included, the publisher will be pleased to make amends at the earliest possible opportunity.

To avoid the issue of disclosure of answer-related information to candidates, all copyright acknowledgements are reproduced online in the Cambridge Assessment International Education Copyright Acknowledgements Booklet. This is produced for each series of examinations and is freely available to download at www.cambridgeinternational.org after the live examination series.

Cambridge Assessment International Education is part of the Cambridge Assessment Group. Cambridge Assessment is the brand name of the University of Cambridge Local Examinations Syndicate (UCLES), which itself is a department of the University of Cambridge.

© UCLES 2020